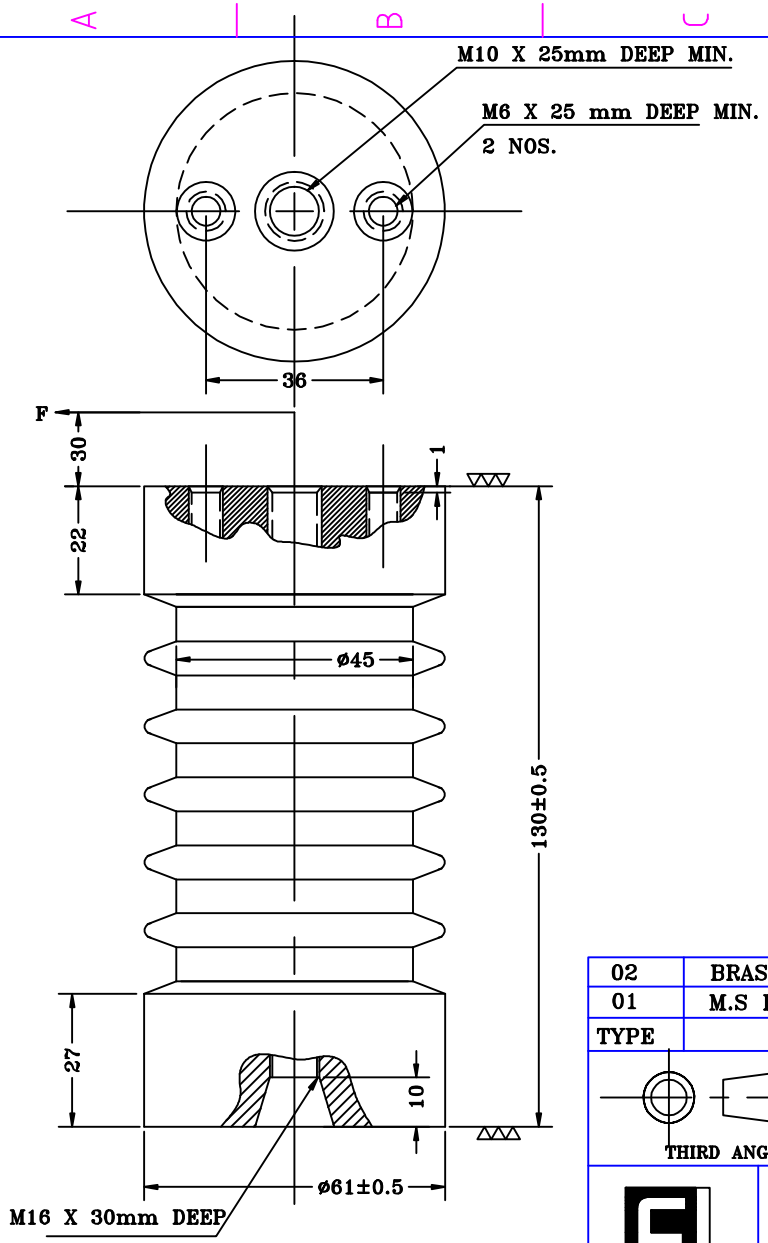

1 MECHANICAL SPECIFICATION IS:9431-1979

TENSILE FALING LOAD.....500Kg

2 COMPERSSION FALLING LOAD.....10000Kg

3 CANTILEVER FALINGS LOAD.....500Kg

ELECTRICAL SPECIFICATION IS:9431-1979

1 RATED VOLTAGE.....11kv

2 DRY POWER FREQUENCY WITHSTAND VOLATEGE TEST(ONE MINUT).....35kv

3 MINIMUM CREEPAGE DISTANCE.....175mm

4 DRY LIGHTING IMPULS WITHSTAND VOLATEGE TEST.....95kv Peak

OTHERS

1 COLOUR BRICK RED.

2 ALL DIMENSION ARE IN MM.

TYPE	DISCRIPTION
02	BRASS INSERTS
01	M.S INSERT WITH WHITE ZINK PLATING

THIRD ANGLE

11kv
EPOXY RESINE CAST INSULATOR

ITEM CODE: FF0058

	SIGN	DATE
DRN.	TANVI	08/03/07
CHD.	AP	–
APPD.	–	–

MANUFACTURER
Fibre & Fibre Glass Products
250/7, MAGAZINE HOUSE
G.I.D.C. MAKARPURA,
VADODARA- 390010

DRAWING NO.: FFGP-0012/07-08

Sheet	Edition	REV
1/1	0	0

Checked
Signature
Date
Revision note